dyn
Fall / Winter
2022-23

Roar T

Bellow Sweat

Roar T

Roar T

Roar T

Bellow Sweat

Bellow Sweat

Roar T

Roar T

Bellow Sweat

Zanzi Dress

Roar T / Cheetah Leggings

dyr Fall / winter 2022-23

★=RE-RUNNER

Bellow Sweaat
Moleton Stretch

BLACK NAESEHORN
ROVER KHAKI FLODHEST
COLD BLUE HAMMERHAJ
COLD BLUE PINGVIN
COLD BLUE HAVODDER
VINTAGE ROSE CAVALIER
VINTAGE ROSE HAVODDER
VINTAGE ROSE PINGVIN
ARMY FRENCHIE
BROWN BEIGE RETRIEVER
MARINE KLUMPFISK
PINK ROED PANDA
PINK KATTA LEMUR
DK NAVY TIGER
NAVY POLARRÆV
SAGE BRUN BJORN
ROSE BEIGE BRUN BJORN

CLAY VIOLA FLODHEST
CLAY VIOLA SAEL
WARM KHAKI GRAVHUND
LIGHT ARMY VASKEBJORN
LIGHT ARMY MOPSLYS
FALL JUNGLE CHIMP
GREEN TRICERATOPS
DARK RED FLAMMINGO (pink GLITTER)
DARK RED ZOOMGORILLA
PASTEL BLUE VILDKANIN

Furry Dress
Moleton Stretch

OLD ROSE FRENCHIE
BLACK MAUVE MAMMUT Silver glitter
CLAY VIOLA MOPSLYS
VINTAGE ROSE PINGVIN

Roar T
180gr cotton / lycra

OLD ROSE KATTALEMUR
COLD GREEN VILDHUND
COLD GREEN BLÆKSPRUTTE
MIDNIGHT BLUE KLUMPFISK
GREY BLUE SLANGE
JAM FLAMINGO
FASHION PINK ROD PANDA
DARK KHAKI RHINO DIN VEN
SAGE ZEBRA
KATTALEMUR GREEN
NAVY DOVENDYR
DUSTY BLUE ELEFANT
SAFARI SØKO
DK SAFARI HVALROS
DK SAFARI ULV
MARINE ELG
DK NAVY KLOVN FISK
DK NAVY PIRATFISK
RASBERRY SORBET PINGVIN
RASBERRY SORBET DK RED LOEVE

GREY ORANGUTAN
GREEN KOMODO
FALL JUNGLE FLODHEST
POWDER ROSE KLOVNFISK
POWDER ROSE CAVALIER
OLD ROSE MOPSLYS
OLD ROSE NYBJOERN
BLUE STEEL NYBJOERN
BLUE STEEL FRENCHIE
FRESH GREEN GIRAF
FRESHGREEN BAMBOOPANDA
ARMY MAMMUT
ARMY EGERN
BEIGE ROSE ZEBRA - BLACK GLITTER
COLD BLUE HAVODDER
COLD BLUE SKILPADDE
BLUE PINGVIN
BLUE ROKKE
PORCELAINE LOEVE (MARINE)
BLACK VASKEBJORN
BLACK TIGER

BRICK RAEV
WARM KHAKI TRICERATOPS
GREY MAUVE SOMMERFUGL
GREY MAUVE HAVODDER
BROWN BEIGE GRAVHUND
BLACK GREEN ZOOMGORILLA
BLACK GREEN/ARMY TYKHUDER AOP
BLACK NAESEHORN AOP
REDWINE ROED PANDA AOP
VINTAGE ROSE FLUTTER AOP
PINK FLAMMINGO AOP
FALL JUNGLE/DARK NAVY ELEPHANT
RED WINE/OLD ROSE SILVER GLITTER ELEPHANT
VINTAGE ROSE STRUDS
VINTAGE ROSE RETRIEVER
VINTAGE ROSE PANDA
BLUE DOLPHIN
NAVY TIGER2
NAVY HAJ
NAVY PANDA
NAVY FLODHEST
NAVY KOBRA

ROSE BEIGE POLARÆV
FRESH BLUE BRUN BJORN

Hiss jog
Moleton Stretch

BROWN BEIIGE
WARM KHAKI
CLAY VIOLA
MARINE
BLACK MAUVE

Cheetah leggings
180gr cotton / lycra

ARMY
COLD BLUE
VINTAGE ROSE
PINK
FALL JUNGLE
OLD ROSE

Zanzi Dress
180gr cotton / lycra

DK NAVY GOLD GLITTER ELEPHANT
GREY MAUVE VASKEBJORN
OLD ROSE GRAVHUND
VINTAGE ROSE FLUTTER AOP
PINK/RASPBERRY SORBET FLAMMINGO AOP
RED WINE/OLD ROSE PANDA
BEIGE ROSE FLAMMINGO
BLACK T-REX
BLACK CAVALIER (DK Bkgrnds)
VINTAGE ROSE RETRIEVER
BRICK BLACK GLITTER GIRAF

RED WINE ROED PANDA AOP
VINTAGE ROSE FLUTTER AOP
PINK FLAMMINGO AOP

Bark Undie Set
180gr cotton / lycra

BLACK GREEN TYKHUDER AOP

Nest Undie Set
180gr cotton / lycra

PINK FLAMMINGO AOP

Growl T
180gr cotton / lycra

PORCELAINE HAVODDER
HAMMERHAJ BLUE
FRESH GREEN KROKODILLE
VINTAGE ROSE BJOERN

Quack Suit
180gr cotton / lycra

RASPBERRY SORBET ELEPHANT - SILVER GLITTER
GREEN ELEPHANT
BLACK NAESEHORN AOP
RED WINE ROED PANDA AOP

Tweet Suit
180gr cotton / lycra

DARK NAVY HAJ
OLD ROSE SOMMERFUGL
BLACK GREEN PINGVIN
FALL JUNGLE/DARK NAVY ELEFANT
RED WINE/OLD ROSE SILVER GLITTER ELEPHANT
BLACK GREEN TYKHUDER AOP
PINK FLAMMINGO AOP

Critter T
180gr cotton / lycra

DARK NAVY KLOVNFISK
GREY MAUVE SOMMERFUGL
RASPBERRY SORBET PINGVIN
JUNGLE FLODHEST
BLACK GREEN TYKHUDER AOP
VINTAGE ROSE FLUTTER AOP

dyr NOOS

Bellow Sweat 1-10YR
Moleton Stretch
backside brushed

BLACK NÆSEHORN | DK ROSE FLAMMINGO | OLD ROSE SOMMERFUGL | HONEY LØVE | DUSTY BLUE ULV | SAFARI MAMMUT | GREY DUCK MAMMUT

ROSIE PANDA | ROSE GLOW ELEFANT | NAVY ELEFANT | BLACK ZOOM GORILLA | GREY DUCK PANDA | BLACK PANDA | DK SAFARI T-REX | DK NAVY HAJ

Primate SS 1-10YR
160 gr slub jersey

TROPICANA ZEBRA | LIGHT LEMON LOEVE | LIGHT SAGE PANDA | BLACK ZOOMGORILLA | NAVY ELEFANT

Roar Tee 1-10YR
180gr Cot/Elast

FROZEN ROSE SEAL | LT BLUE SEAL | DK SAFARI T-REX | DARK OCEAN NAESEHORN

Growl Tee 1-10YR
180gr cot/elast

SAFARI FLODHEST | DUSTY BLUE HAJ

Howl Tee 1-10YR

PLANT T-REX | BLACK T-REX

Wildlife T 1-10YR
160 gr cot/ela jersey

ROSE GLOW ELEFANT

Wildlife T
160 gr slub jersey

ROSIE PANDA

Birdy Dress 2-10YR
180gr Cot/Elast

DK ROSE LOEVE

dyr fall / winter 2022-23

Galop Socks
Cotton / Lycra

YELLOW PENGUIN | BLACK BRUN BJORN | PORCELAINE BLUE POLAR RÆV | PASTEL PINK VILDKANIN | PASTEL PINK FLAMINGO | OLD ROSE REDPANDA | BLUE KLOVNFISK | NAVY ELEPHANT | BLACK GIRAF | LT ARMY LION | DEEP FOREST VASKEBJORN | OLDROSE ELEFANT | PINK FLODHEST | BLACK T-REX | DEEP FOREST MAMMUT | NAVY HAJ | BLACK GORILLA

DYR Kids Backpack
Waterproof coating inside shell fabric

ORANGE TIGER | BLACK NAESEHORN | ROSE FLUTTER | PINK FLAMINGO | OLD ROSE RED PANDA | DARK GREY GORILLA | DARK GREY HAJ | DARK GREY SAEL | GREEN T-REX | WARM ROSE PENGUIN | LT BLUE PENGUIN | DARK BLUE ISBJOERN | BLACK BROWN BJOERN

Feed Fannypack

BLACK NAESEHORN | PINK FLAMINGO | ROSE FLUTTER | OLD ROSE RED PANDA

Log Pencil case

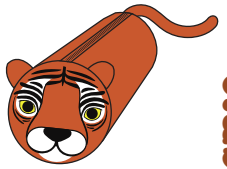

ORANGE TIGER

DYR Bamse
100% polyester

GORILLA PLUSH TOY | HIPPO PLUSH TOY

Munchie bib
180gr cotton / lycra

DK NAVY MAMMUT | BLACK ZOOM GORILLA | PINK FLAMINGO AOP | TYHUDER BLK-GREEN/ARMY | DK NAVY ELEFANT | PASTEL BLUE KLOVNFISK | GREY VASKEBJORN | VINTAGE ROSE RETREIVER

Loeve beanie
180gr cotton / lycra

TYHUDER BLK-GREEN/ARMY | PINK FLAMINGO

Paw Mitterns

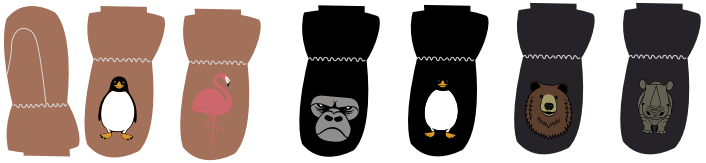

BEIGE ROSE PINGVIN | BEIGE ROSE FLAMINGO | BLACK ZOOMGORILLA | BLACK PINGVIN | DK NAVY BRUNBJOERN | DK NAVY NÆSHORN

DYR Erasers

RED PANDA | HAJ | KANGAROO | ELEPHANT | TIGER | SOMMERFUGL | PENGUIN | T-REX | SÆL

Blyant

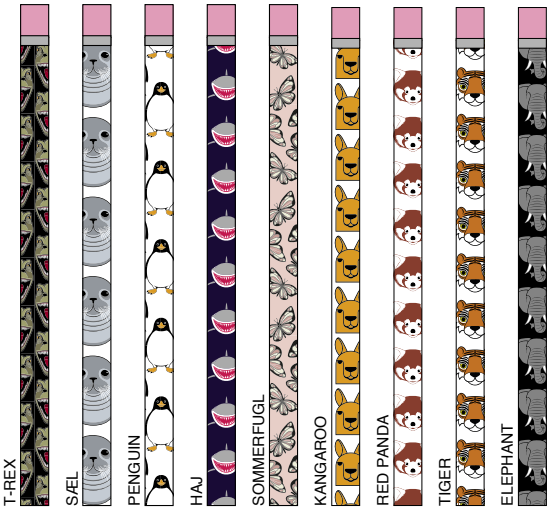

T-REX | SÆL | PENGUIN | HAJ | SOMMERFUGL | KANGAROO | RED PANDA | TIGER | ELEPHANT

Leaf pencil case

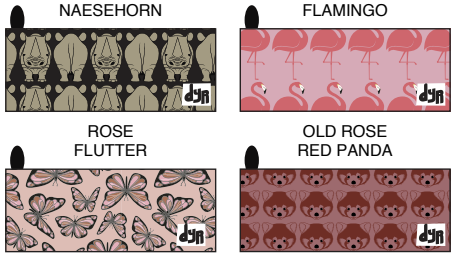

BLACK NAESEHORN | PINK FLAMINGO | ROSE FLUTTER | OLD ROSE RED PANDA

SUT 2-PAK

BLUE PANDA | BLACK GORILLA | GREY FLODHEST | PINK PANDA

Postcards

Counter Display

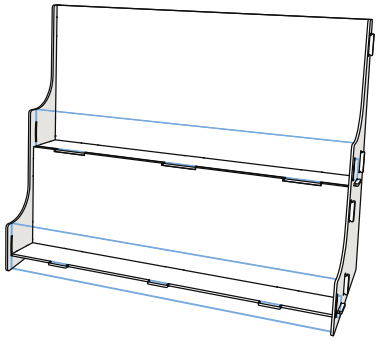

www.dyr-cph.dk

Slagelsegade 8A, st.,
2100 København Ø
DENMARK
CVR-29173648
kundeservice@danefae.dk
Tlf. + 45 69 14 99 00